JATEN

LN1600-MFZ1675-NDC

PRODUCT MANUAL

嘉腾机器人
400 830 1028



LN1600-MFZ1675-NDC

L2680×W1568×H3322mm

Laser-guided narrow aisle forklift, 3D obstacle avoidance, camera recognition, online side charging

1. On the basis of retaining the main structure of the original car, carry out intelligent automation electrical transformation, the main technical index parameters are consistent with the original car.
2. Danaher Motion NDC8 Laser/natural navigation system, switchable between laser and natural navigation.
3. Large-capacity lithium battery with side on-line automatic charging.
4. Maximum load 1000kg, maximum lifting height 7500mm.
5. Mainly used in warehousing, home appliances, electronics, publishing and printing, automotive, pharmaceutical, electric power, tobacco and other industries.

嘉腾机器人 400 830 1028

CHARACTERISTIC



LN1600-MFZ1675-NDC

L2680×W1568×H3322mm

Model	LN1600-MFZ1675-NDC	
Basic skills	Narrow Aisle forklift truck	
Weight	3787kg (Including Battery)	
Capacity	1600KG	
Laser navigation	Navigation system	NDC laser navigation
	Navigation mode	Reflector Laser Navigation
Drive	Forward/Backward/Turn	
Communication mode	Wireless LAN	
Forward speed	1500mm/s	
Acceleration	400mm/s^2	
Climbing ability	6%	
Minimum turning radius	1800mm	
Lifting height	7500mm	
Dimension	L2680×W1568×H3322mm	
Fork Size	L1296×W100×H40mm	
Fork outer width	520mm	
Braking Mode	Electromagnetic brake	
Accuracy	±10mm	
Charging time	< 2h	
Battery life	4-6h	
Accumulator	DC48V、200AH (Lithium iron battery)	
Charging mode	Online Charging (Side Charging)	

青腾机器人 400 830 1628

VIEW



LN1600-MFZ1675-NDC

L2680×W1568×H3322mm

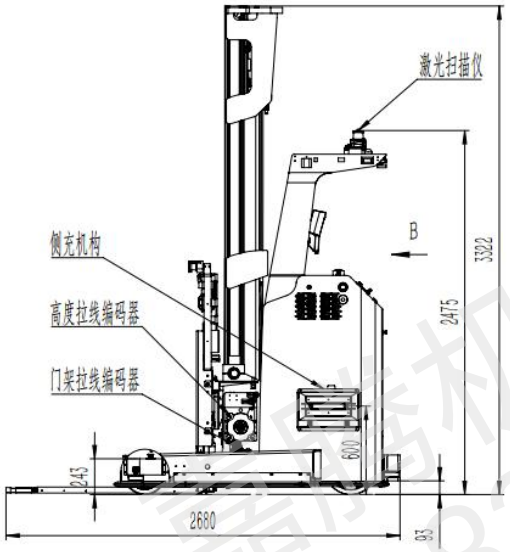

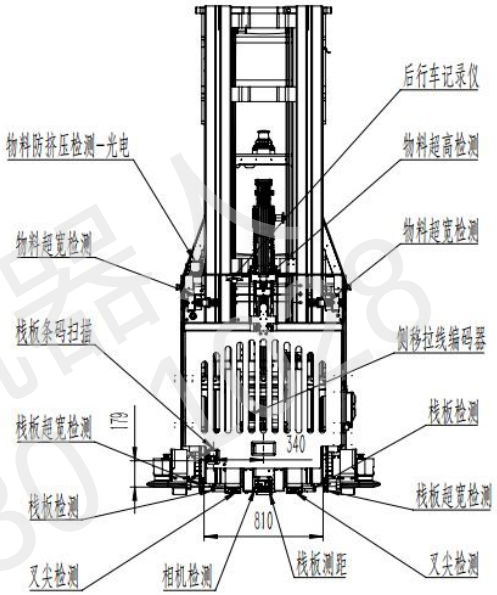

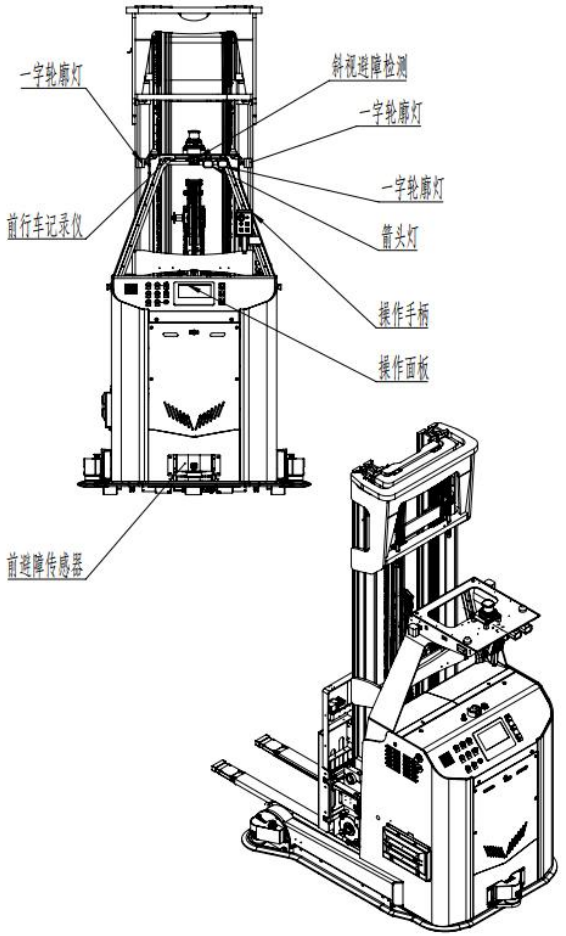

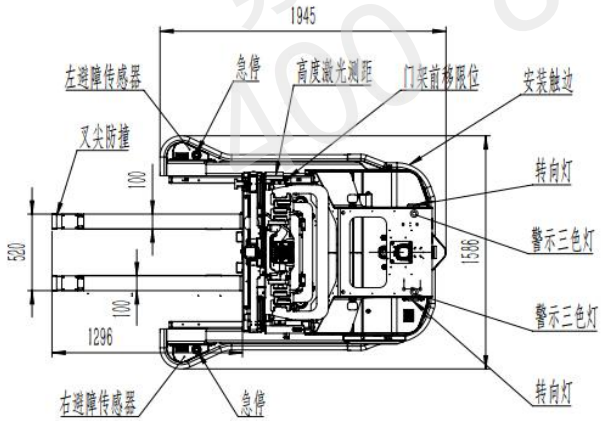

技术参数：
1、AGV尺寸：2680mm长×1586宽×3322mm高；
2、NDC激光导航；
3、高度3000mm，举升能力1000kg；高度7500mm，举升能力600kg
4、在线侧充；

JATEN

Let Jaten shine on Mars

LinkedIn

Search " Jaten "

嘉腾机器人
400 830 1028

Address

7666 Market St, Canton MI 48187

Email

Marketing@jtrobots.com

Website

www.jtrobots.com